3 611 B64 000
Issue / Stand 09-08-27

Fig./Abb. 1

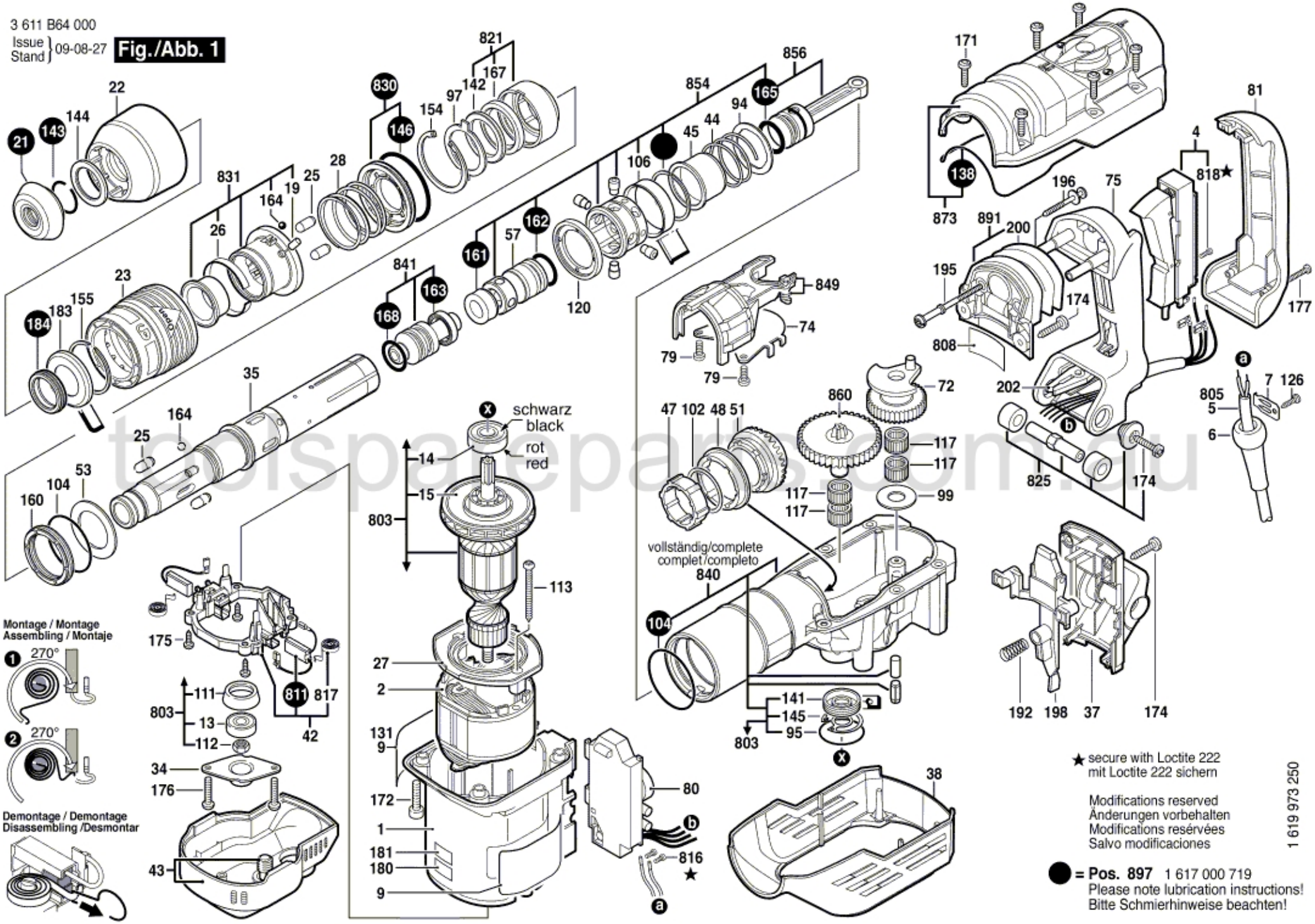

toolspareparts.com.au